SmartRack™ Assembly Instructions

Models: SR25UBKD and SR25UBEXPKD

TRIPP·LITE

1111 West 35th Street, Chicago, IL 60609 USA
773.869.1234 • www.tripplite.com

Copyright © 2008 Tripp Lite. All trademarks are the sole property of their respective owners.

Parts List

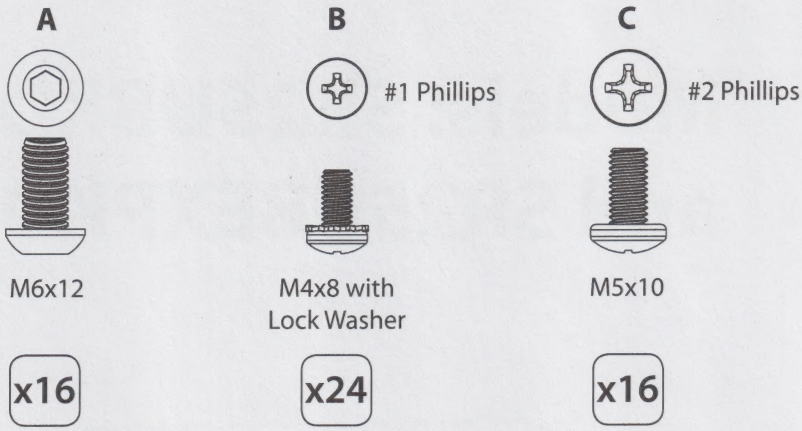

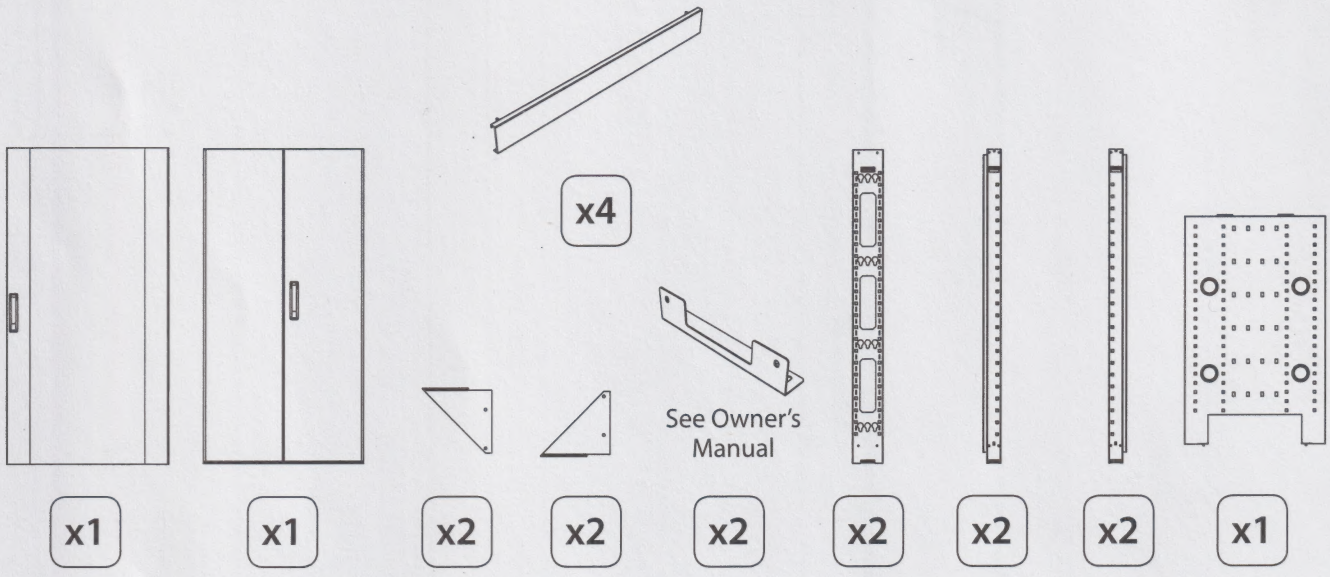

x2

Note: "EXP" models do not include side panels.

Required Tools:

- 5/32" (4 mm) Allen Wrench (Supplied)
- #1 Phillips Screwdriver (User-Supplied)
- #2 Phillips Screwdriver (User-Supplied)

WARNING: The rack enclosure is extremely heavy. Do not attempt to unpack, move, assemble or install the enclosure without assistance. Until it has been properly assembled and stabilized, the enclosure is prone to tipping and could cause property damage and/or personal injury. Use extreme caution when assembling the enclosure and be sure to follow all handling and installation instructions. Do not attempt to install equipment without first stabilizing the enclosure. Refer to Owner's Manual.

step 1

2

2

2

8

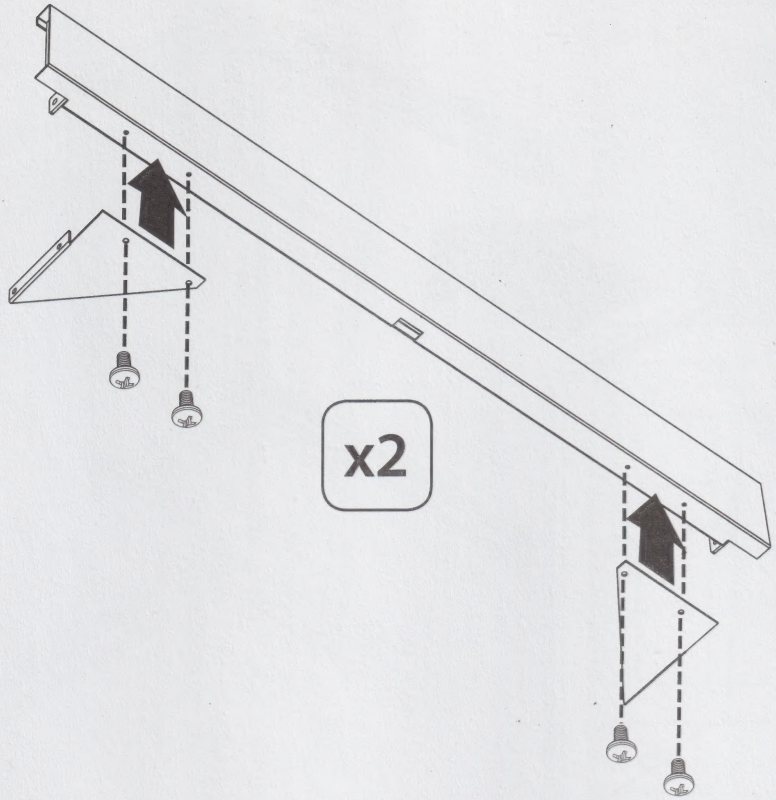

step 2

1

2

2

8

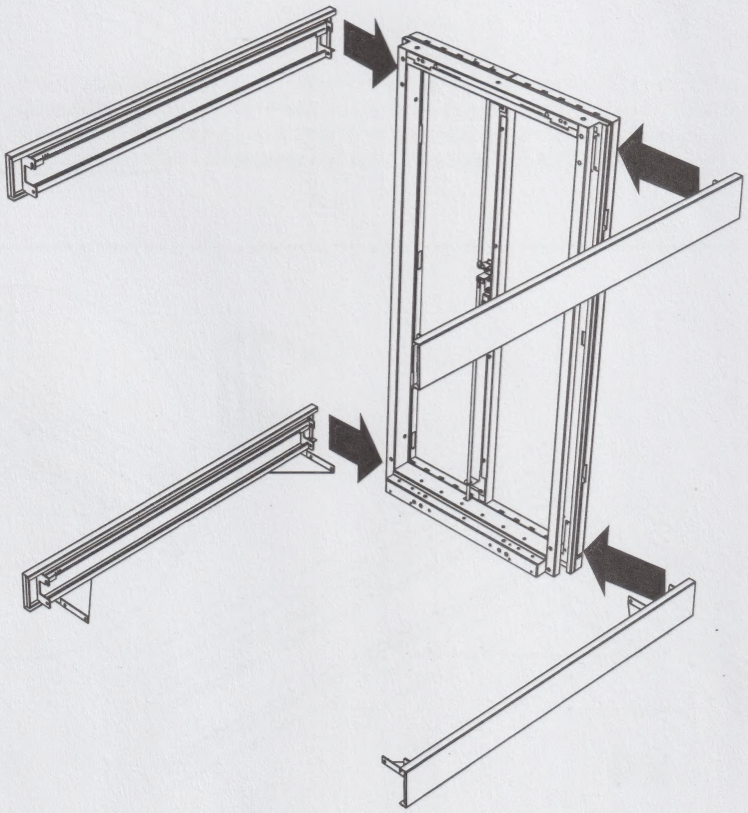

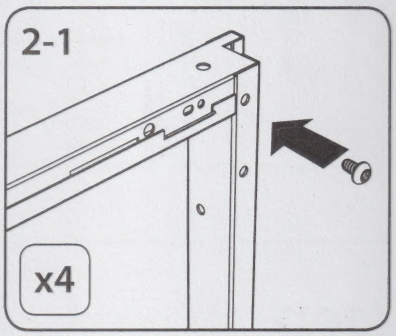

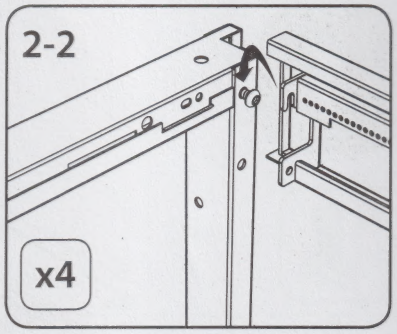

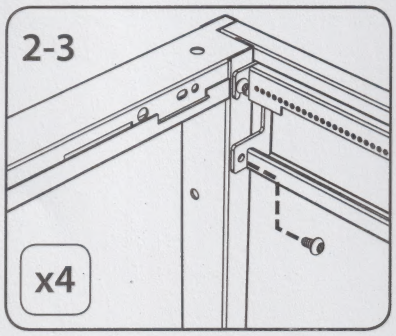

step

3

1

8

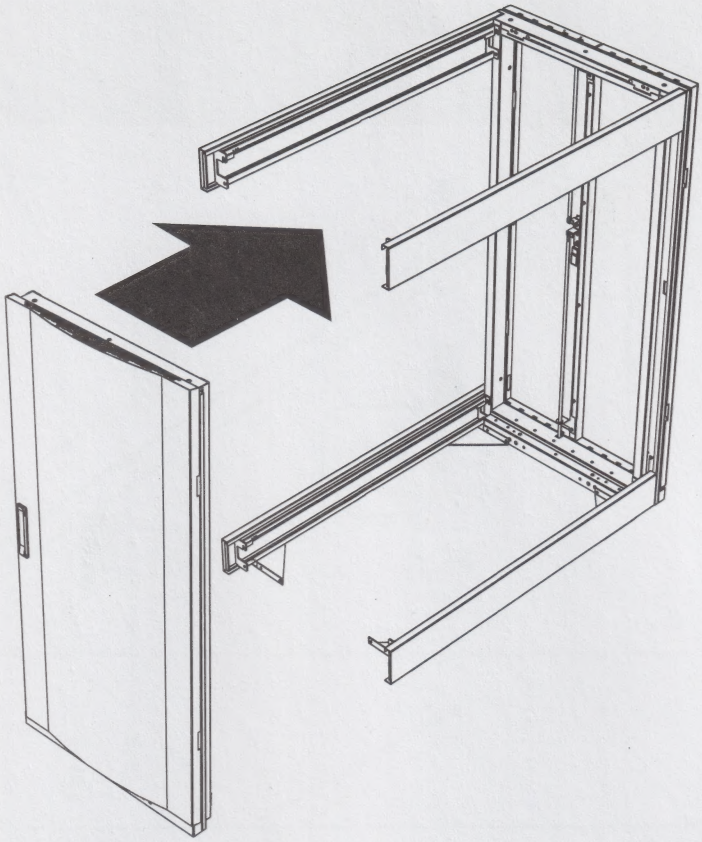

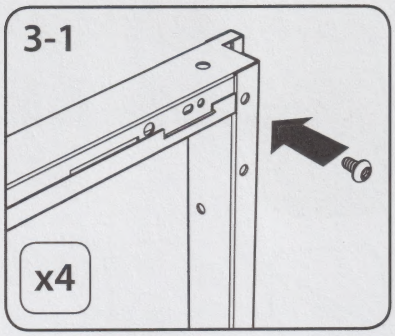

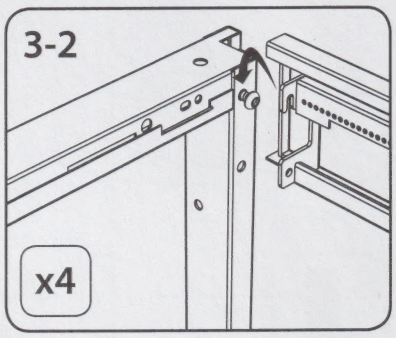

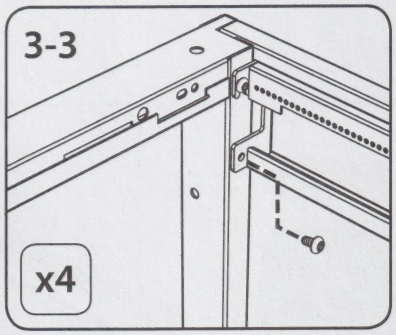

step

4

8

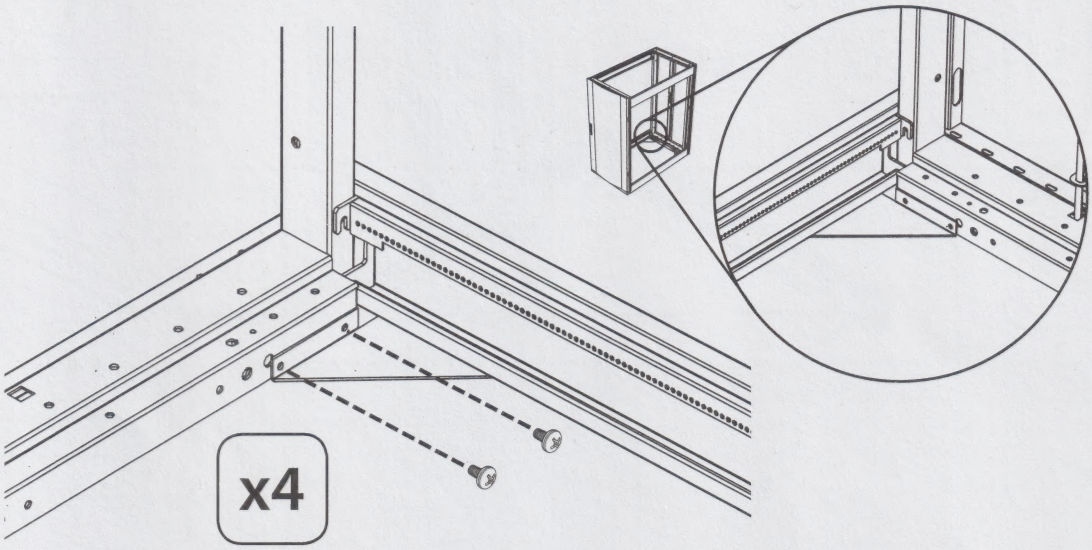

step

5

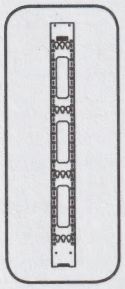

2

8

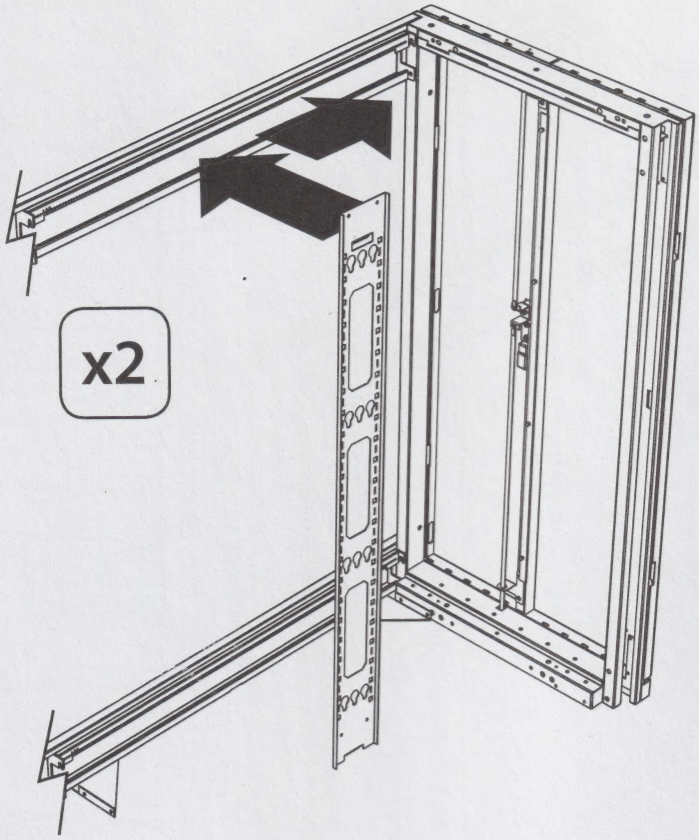

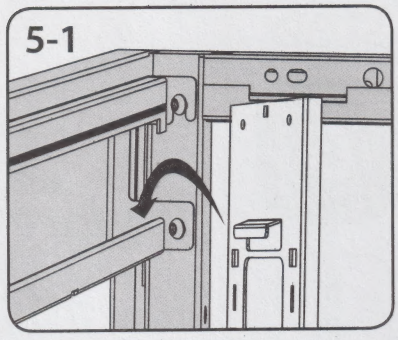

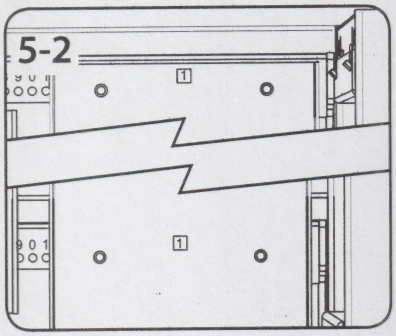

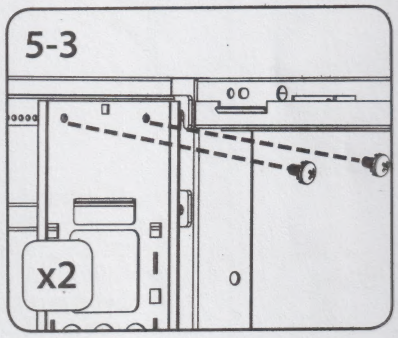

The rail attachment points are numbered to help you align each pair of rails at the same depth. Before attaching the rails using the screws (shown in Step 5-3), make sure the same number appears in all three windows. **Note: Number shown in Step 5-2 is for illustration purposes only; attach rails at desired depth.**

step 6

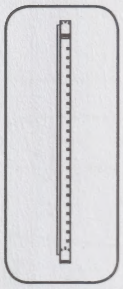

2

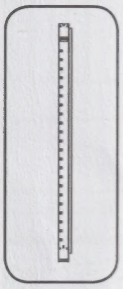

2

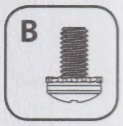

16

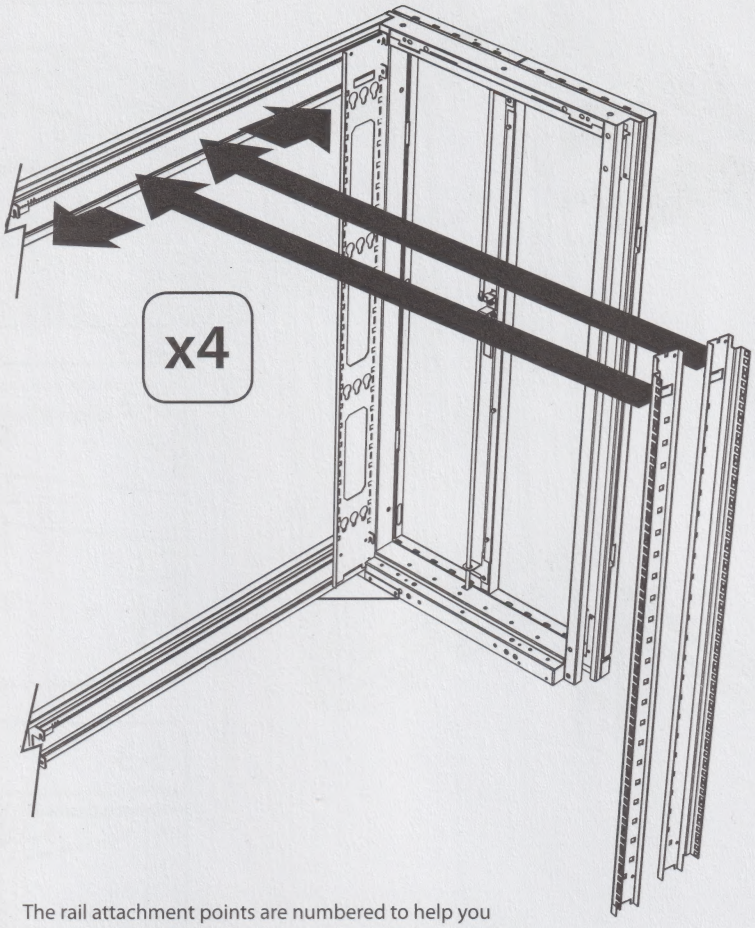

The rail attachment points are numbered to help you align each pair of rails at the same depth. Before attaching the rails using the screws (shown in Step 6-3), make sure the same number appears in all three windows. **Note: Number shown in Step 6-2 is for illustration purposes only; attach rails at desired depth.**

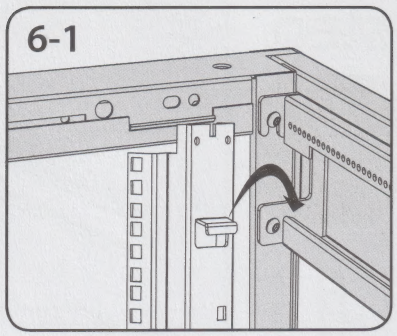

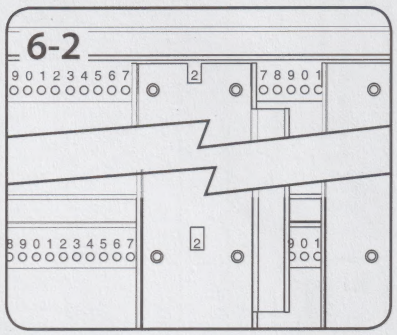

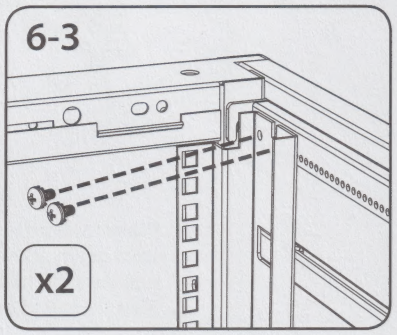

step 7

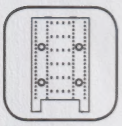

1

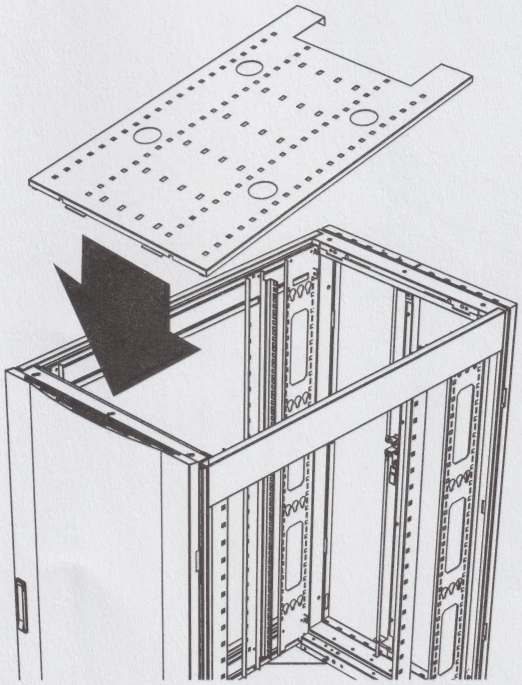

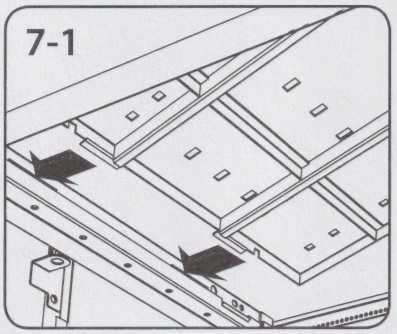

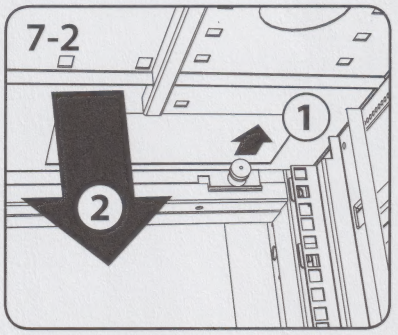

step

8

2

Note: For "EXP" models, skip this step.

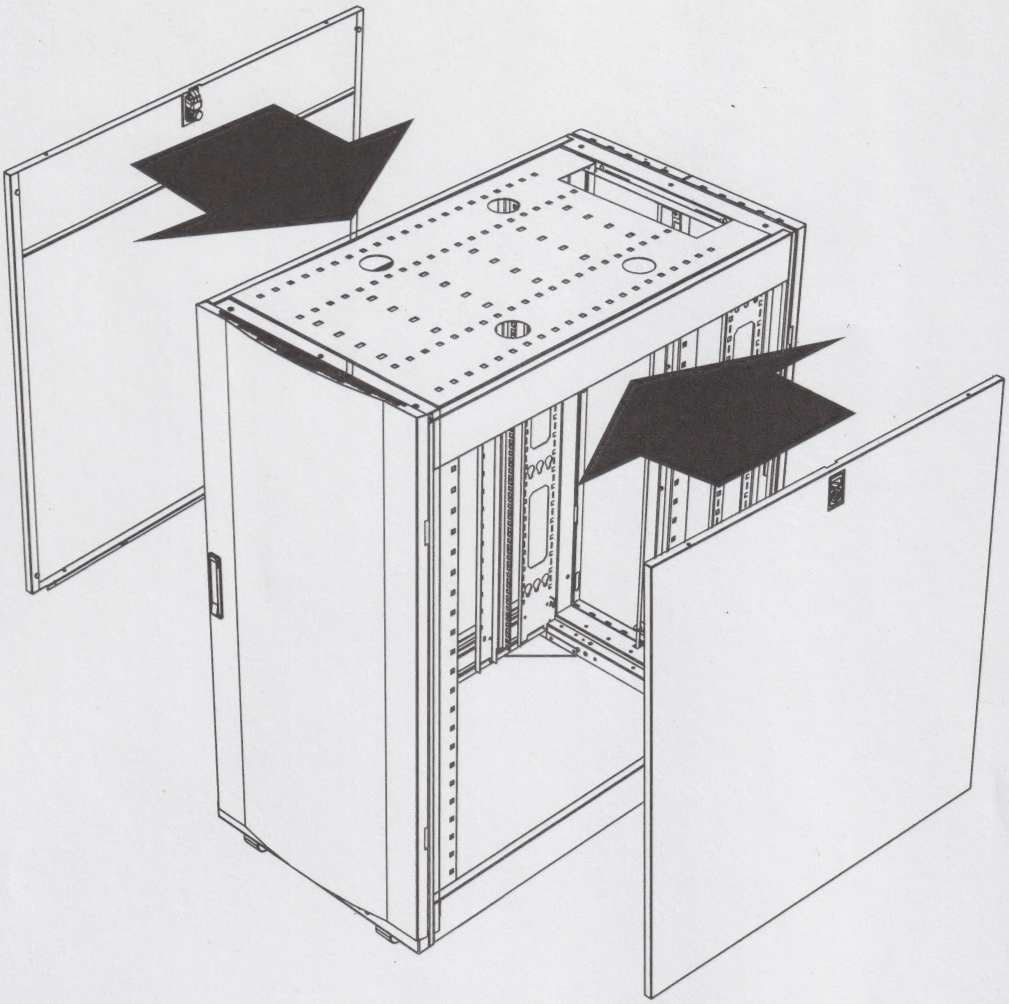

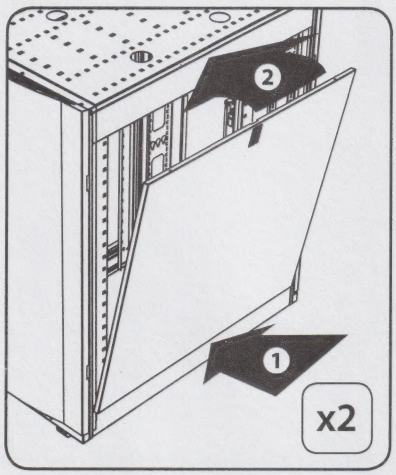

Tripp Lite follows a policy of continuous improvement. Product specifications are subject to change without notice.

Made in China.

1111 West 35th Street, Chicago, IL 60609 USA
773.869.1234 • www.tripplite.com

200807010 93-2823